rovic® QFc WHEEL SUPPORT ASSEMBLY V1.0

* ##-TO SPECIFY COLOR

SL-SILVER | CH-BLACK | AW-WHITE

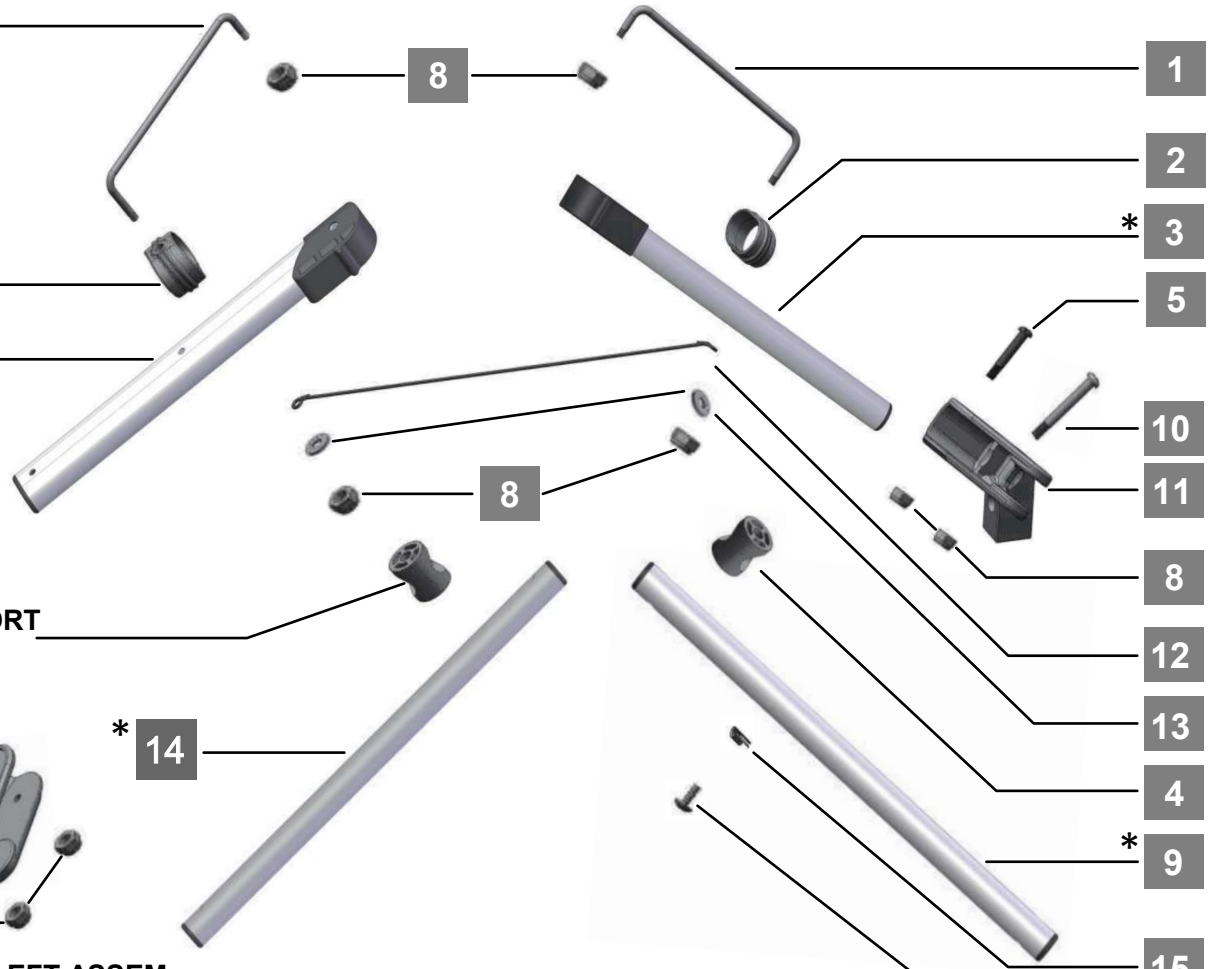

1 **WHEEL DRIVING ROD**
M1C-19H-MF06XX

2 **STRUT ANCHOR**
P1C-58H-XXPAXX

* 3 **MAIN STRUT SET**
T1C-08##-MFASSM

4 **SECOND STRUT TOP SUPPORT**
06-P23-C041-00

5 **M6X37 BOLT**
06-M26-M6X37PM

6 **M6X41 BOLT**
B20-13X-MHM641

7 **STRUT PIVOT LEFT**
P1C-39H-MFPAFG

8 **M6 NYLOCK NUT**
06-M44-M6X6NL

* 9 **LOWER SECONDARY TUBE LEFT ASSEM**
T1C-06##-MFASSM

* 14 **LOWER SECONDARY TUBE RIGHT ASSEM**
T1C-07##-MFASSM

1

2

* 3

5

10 **M6X44 BOLT**
06-M33-M6X44PM

11 **STRUT PIVOT RIGHT**
P1C-37H-MFPAFG

8

12 **BINDING WIRE**
M1C-23X-XX04XX

13 **M6 WASHER**
06-M55-M6WS

4

* 9

15 **PLASTIC CLIP**
P1S-07BL-HCPA66

16 **ST4X10PT SCREW**
B1C-29X-HCST04